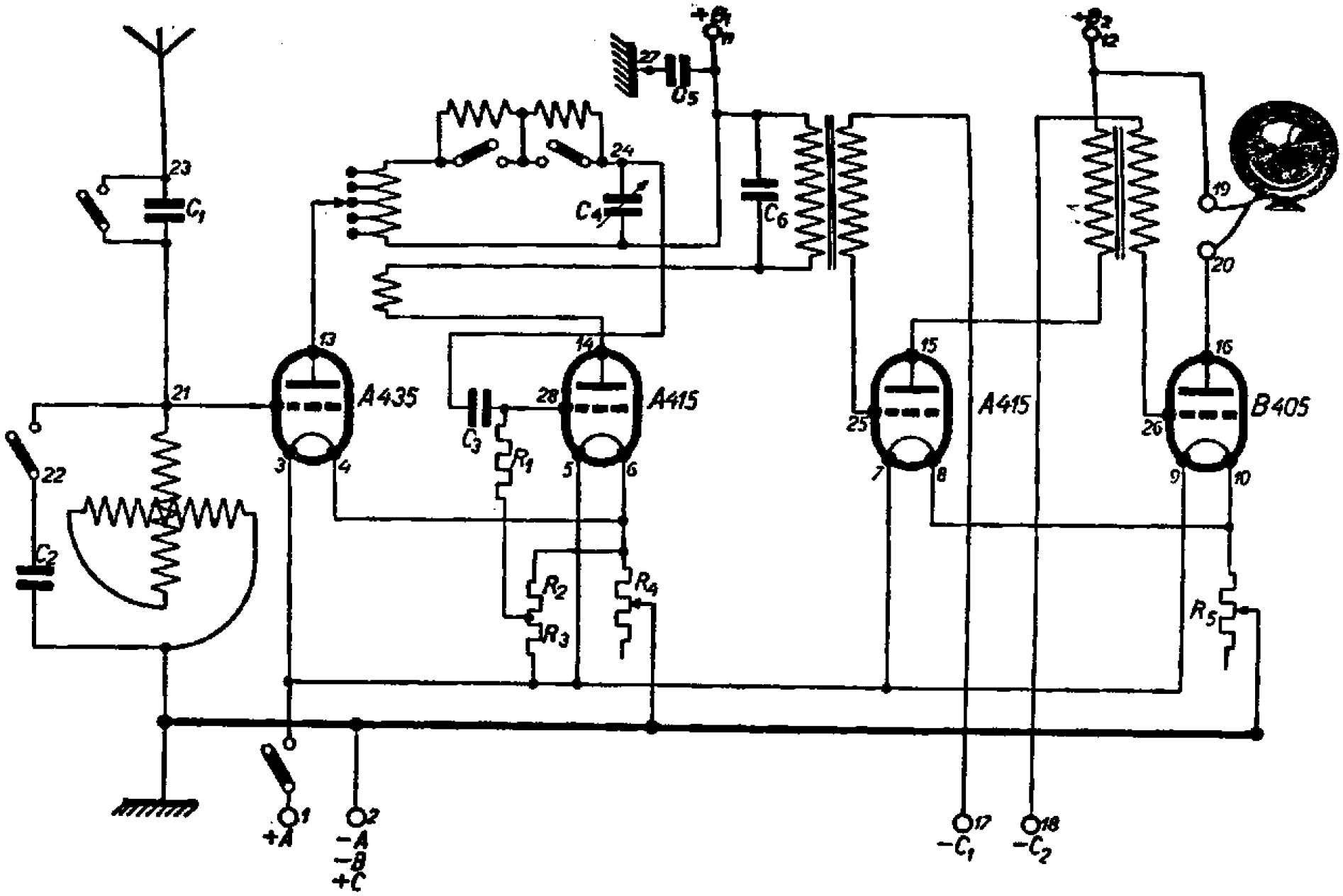
+B1
11
27
C5
+B2
12
23
C1
24
C4
C6
19
20
13
14
15
16
21
A435
28
A415
25
A415
26
B405
22
C3
R1
3
4
5
6
7
8
9
10
C2
R2
R4
R3
R5
+A
1
2
-A
-B
+C
17
-C1
18
-C2